VOLGA

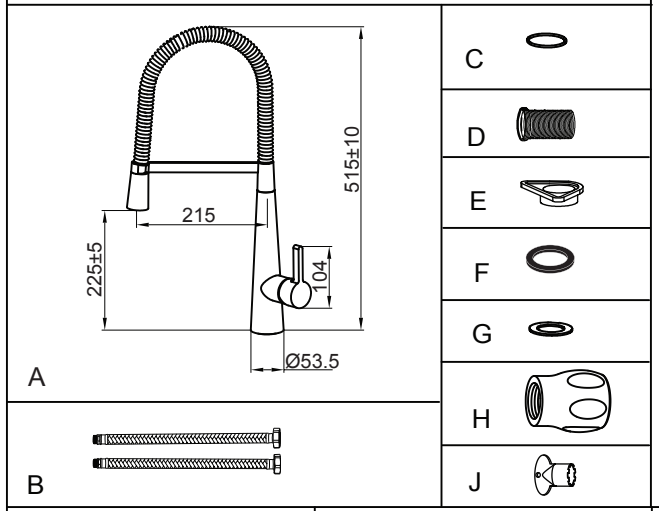
515±10
215
225±5
104
Ø53.5
A
B
C
D
E
F
G
H
J

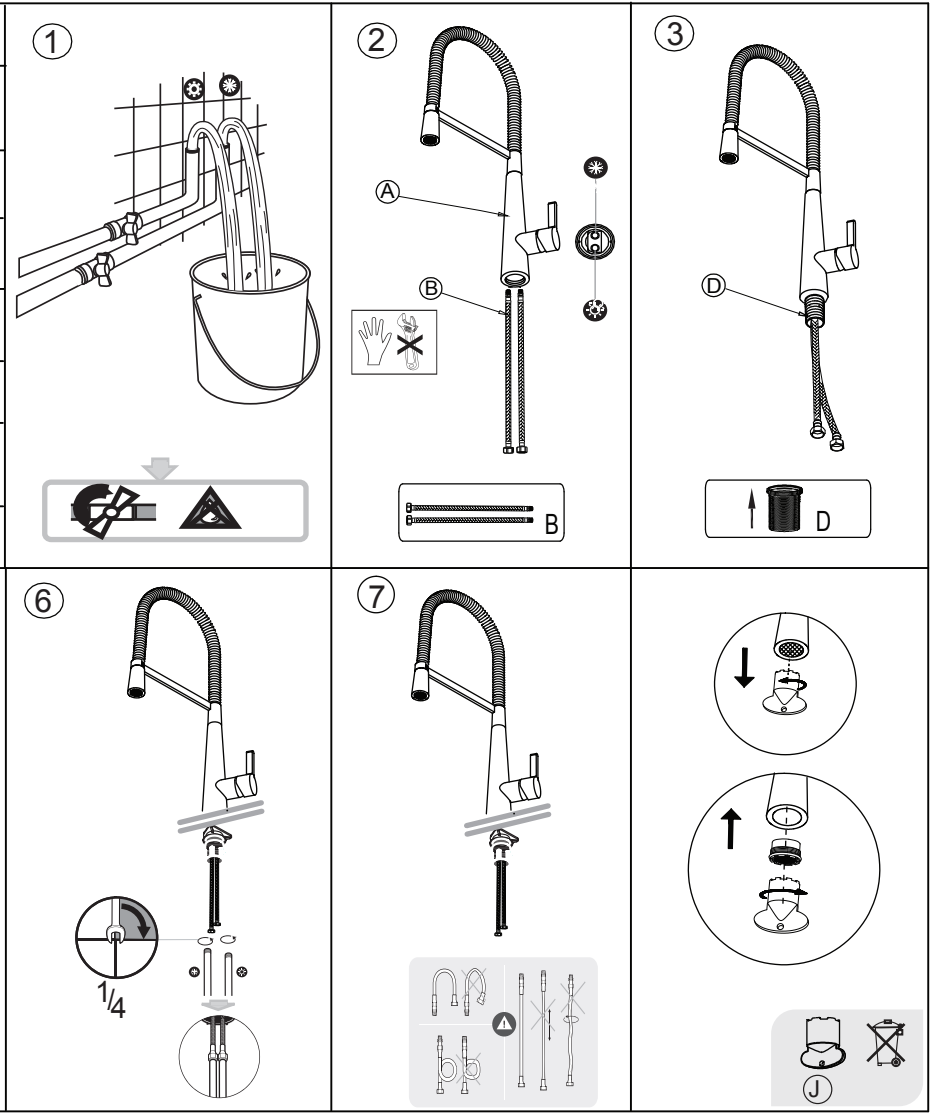
1
2
A
B
B
3
D
D
4
C
C
5
E
F
G
H
E
F
G
H
6
1/4
7
J