KAZOECO

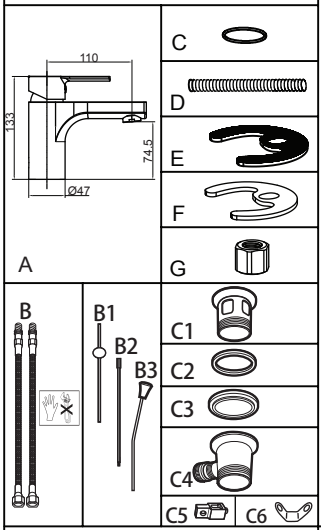
110
133
74.5
Ø47
A
B
B1
B2
B3
C
D
E
F
G
C1
C2
C3
C4
C5
C6

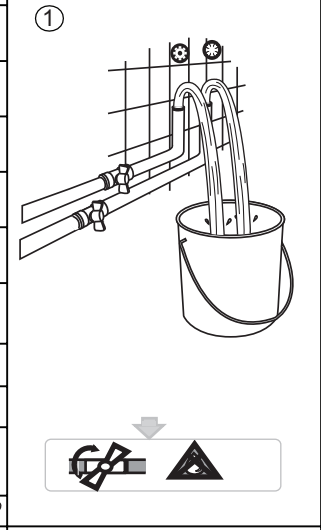
1

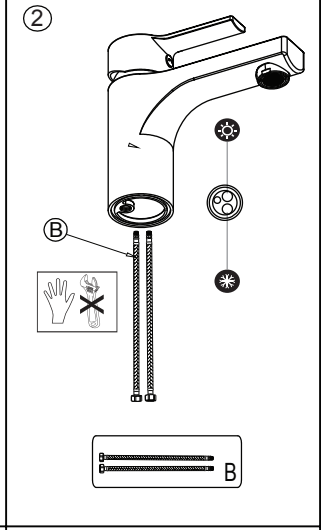
2
B
B

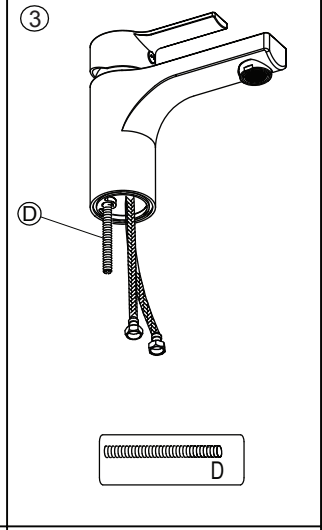
3
D
D

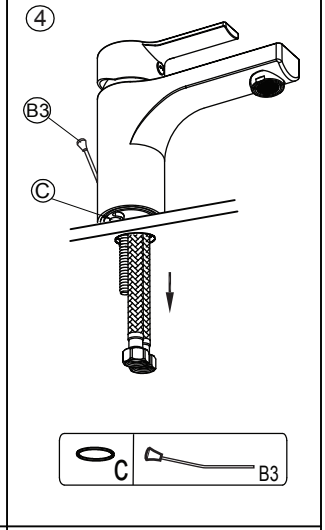
4
B3
C
C
B3

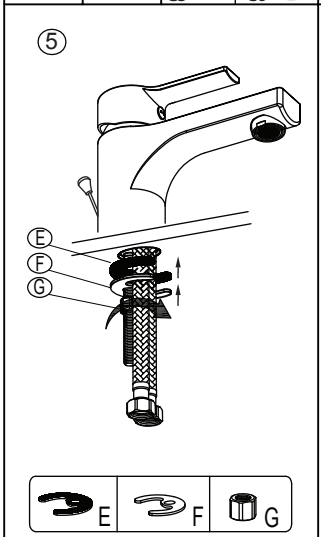
5
E
F
G
E
F
G

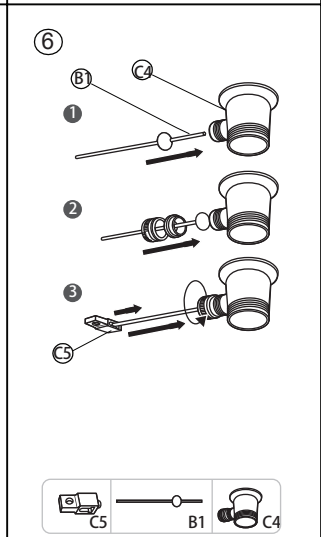
6
B1
C4
1
2
3
C5
C5
B1
C4

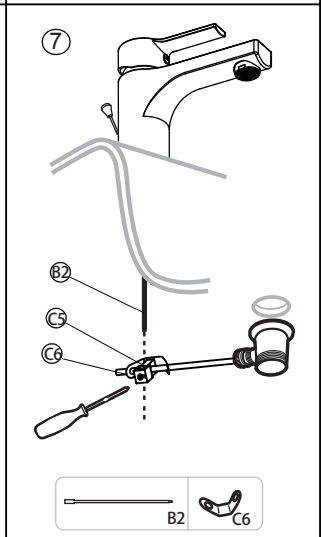
7
B2
C5
C6
B2
C6

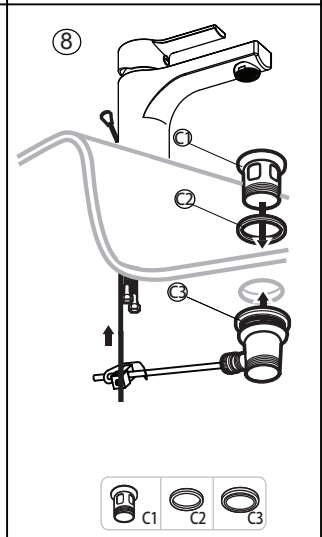
8
C1
C2
C3
C1
C2
C3

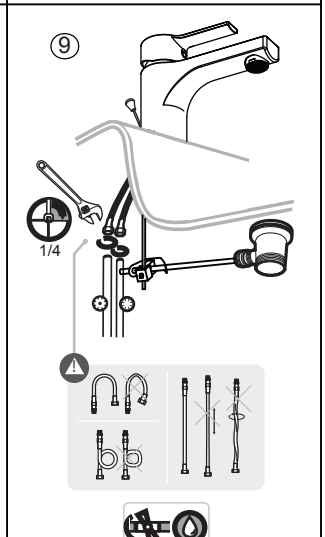
9
1/4